Project 2.3.1a – Miniature Train

Purpose

Have you ever ridden on a train or owned a train set? The parts that make up the engine car on a train can vary depending on the make and model; however, all train engine cars have parts that are similar.

Collecting miniature trains or small replica versions of full size trains is a popular hobby for all ages. Some train collectors showcase their collection for everyone to see. They even build small scale towns and background scenery that trains run through while in the showcase. It is evident the time and detail that many train enthusiasts spend and create to make the showcase come to life.

Being able to read dimensioned drawings of an object is an important engineering skill. Understanding how to transpose these drawings into computer models of parts is also important. As you have learned in previous lessons, a sketch serves as the foundation for all the technical work that comes afterward. Being able to perform this technical work is an obvious must. Relaying this technical work correctly is a skill that allows a group of people to function as a design team.

Equipment

- Computer with 3D CAD solid modeling program
- Printer
- Engineer's notebook

Procedure

This project will provide you with an opportunity to further develop your modeling skills, as well as your ability to use the computer as an efficient communication tool.

What you learned in the past two lessons will be systematically applied to this project.

In this project, you will model the parts needed for the Miniature Train Assembly. The parts with the dimensions are listed below.

Copyright 2007

Train Parts List

Item	Quantity	Name	Description	Material
1	1	Train Body		ABS Plastic
2	1	Stack		ABS Plastic
3	1	Hitch Magnet		ABS Plastic
4	1	Hitch Peg		ABS Plastic
5	4	Wheel		ABS Plastic
6	4	Axle Peg		ABS Plastic
7	2	Linkage Arm		ABS Plastic
8	4	Linkage Peg		ABS Plastic
9	1	Cow Catcher		ABS Plastic

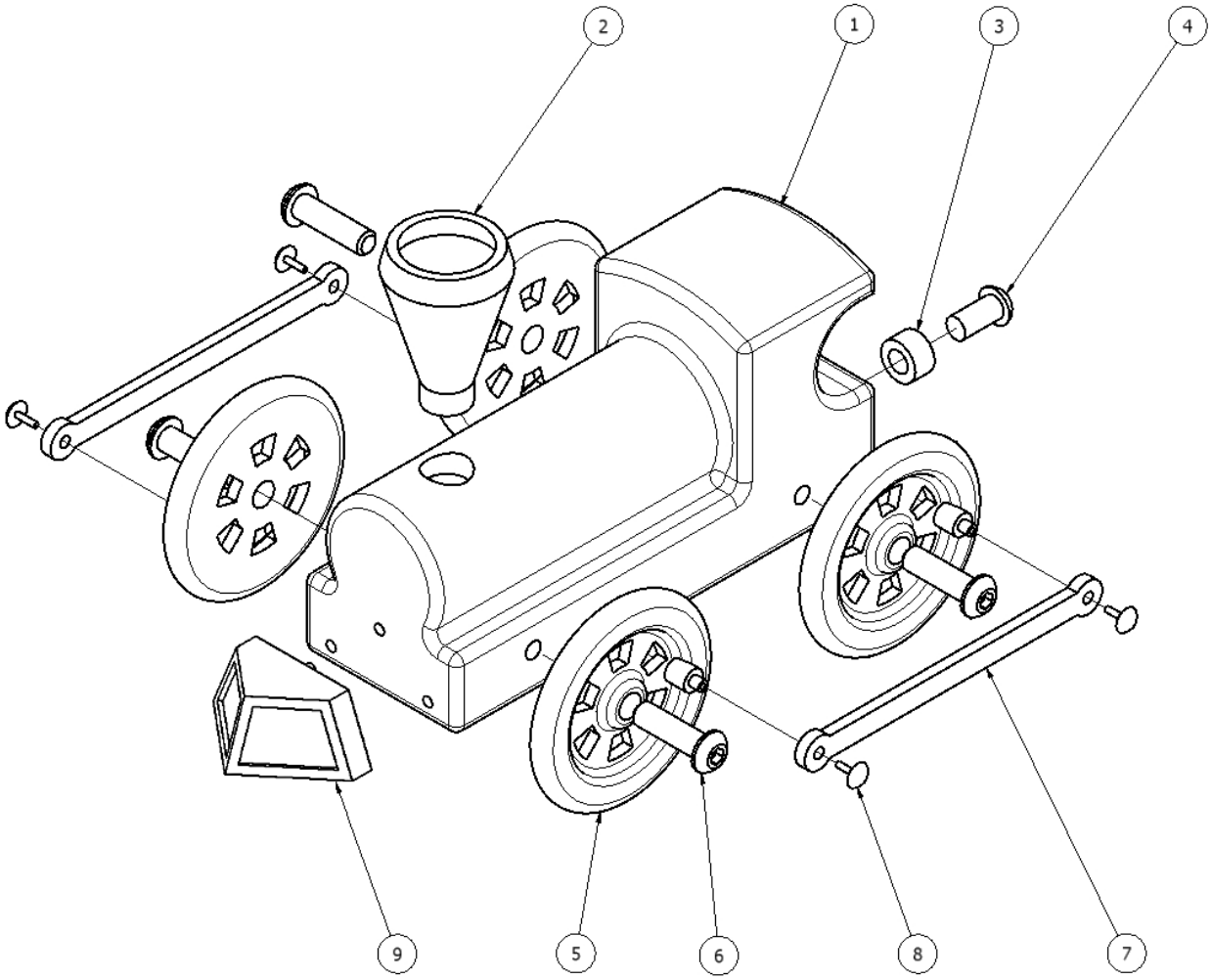

Train Tolerances
All parts have the following tolerances:
X.X = +/- .020
X.XX = +/- .010
X.XXX = +/- .005

Part #1: Train Body

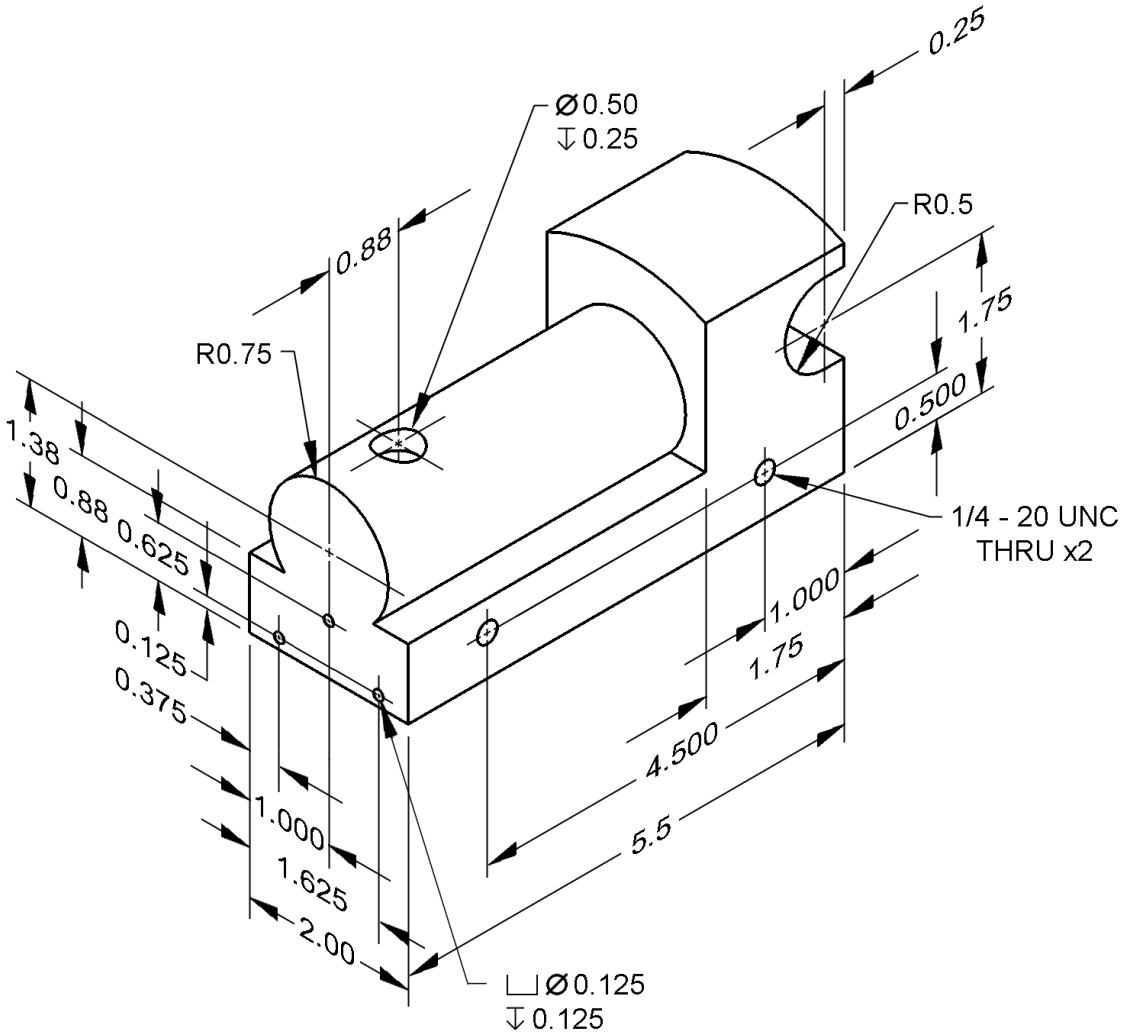

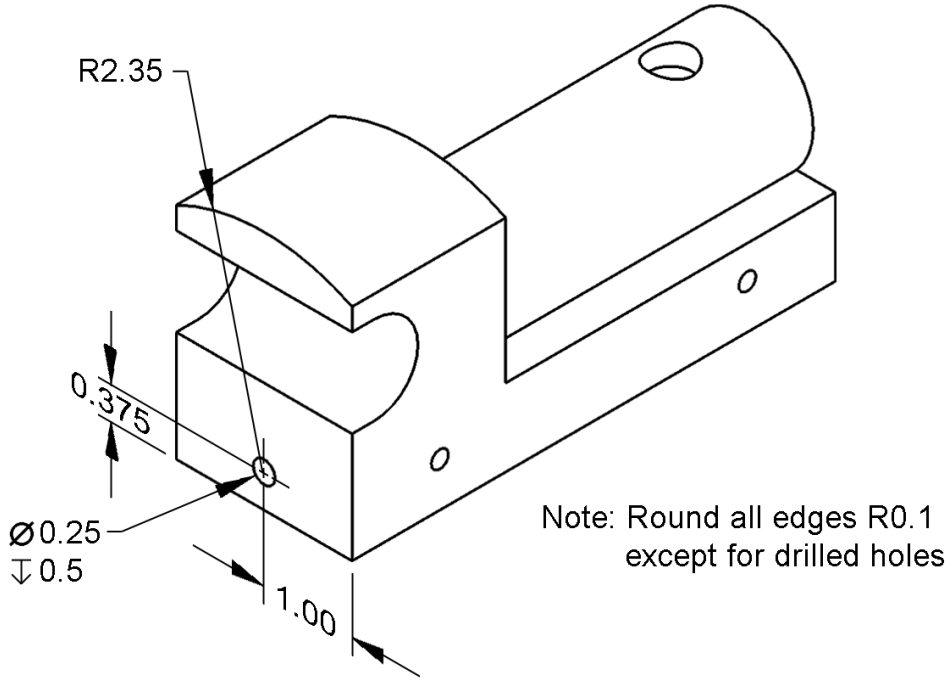

Part #2: Stack

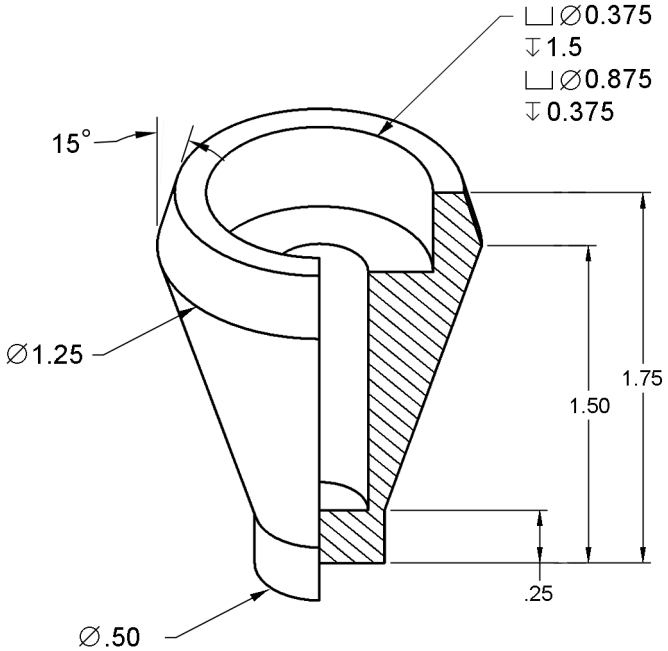

Part #3: Hitch Magnet

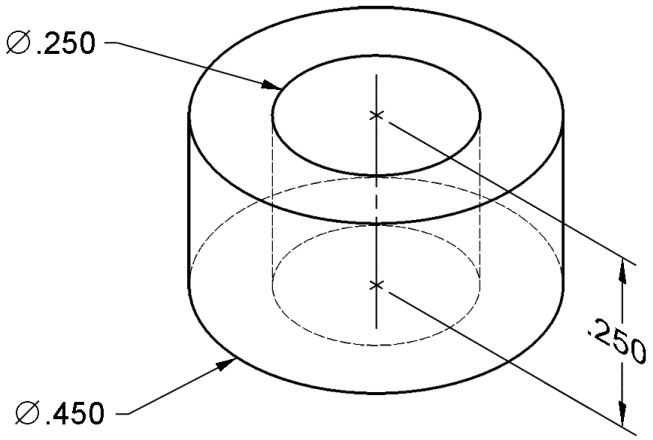

Part #4: Hitch Peg

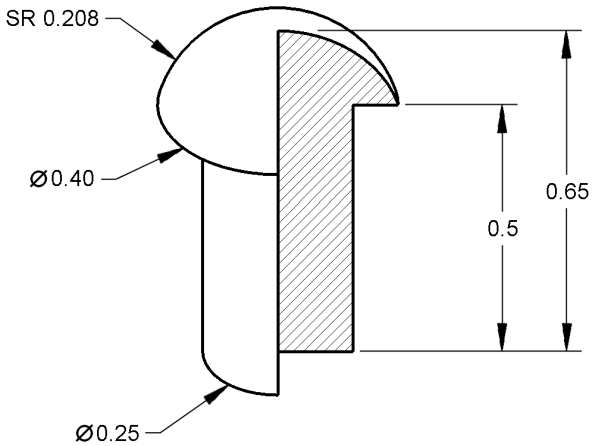

Part #5: Wheel

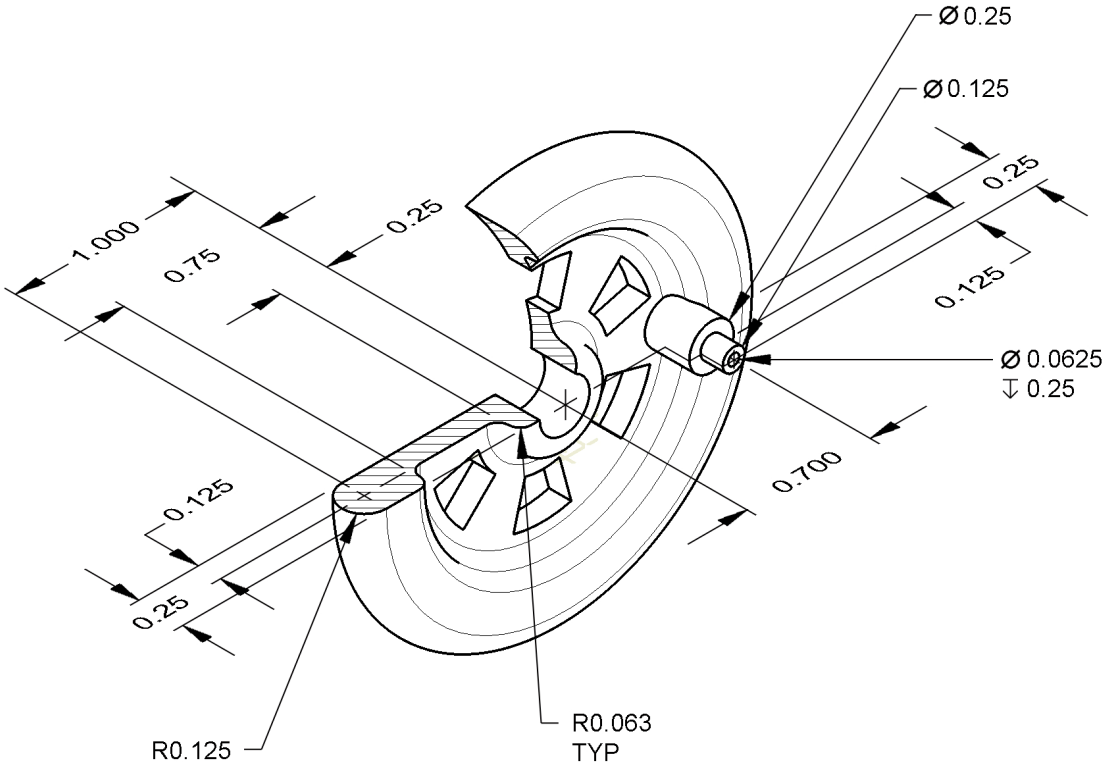
Ø 0.25
Ø 0.125
0.25
0.125
1.000
0.75
0.25
Ø 0.0625
↧ 0.25
0.700
0.125
0.25
R0.125
R0.063
TYP

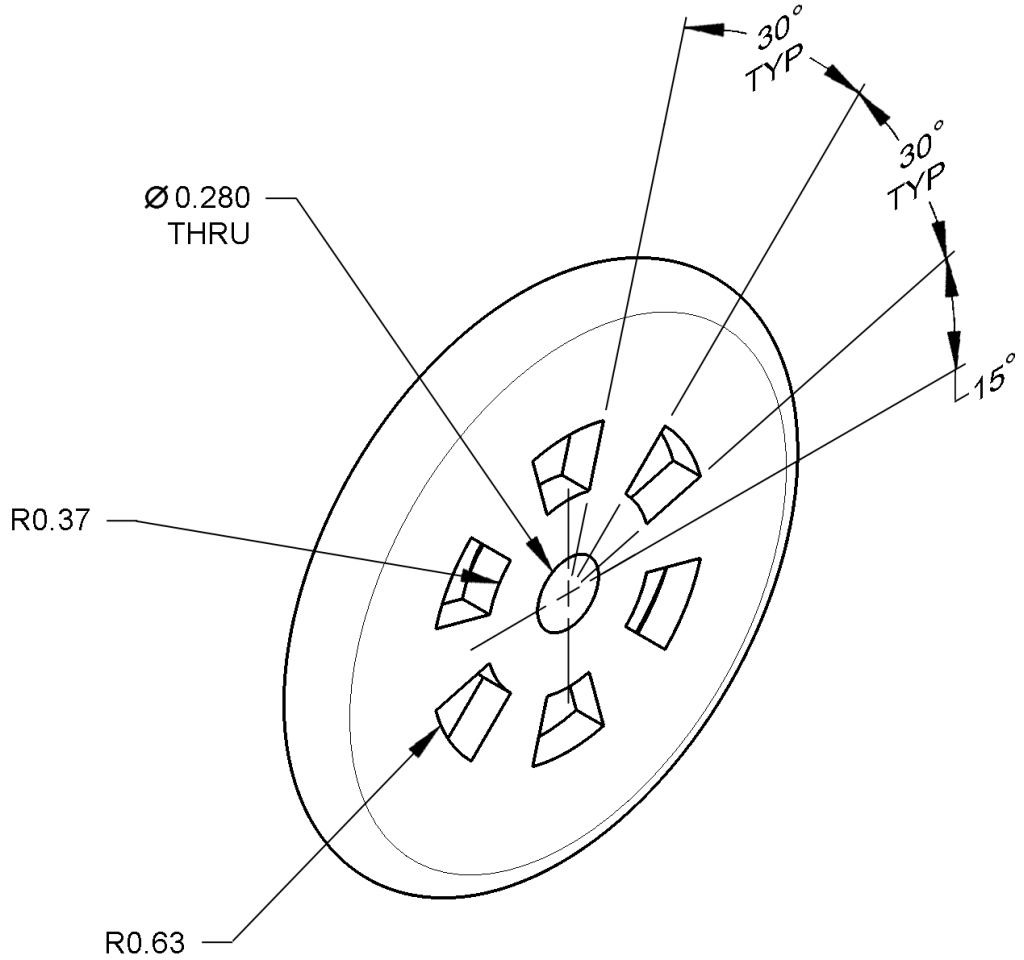
30°
TYP
30°
TYP
Ø 0.280
THRU
15°
R0.37
R0.63

Part #6: Axle Peg

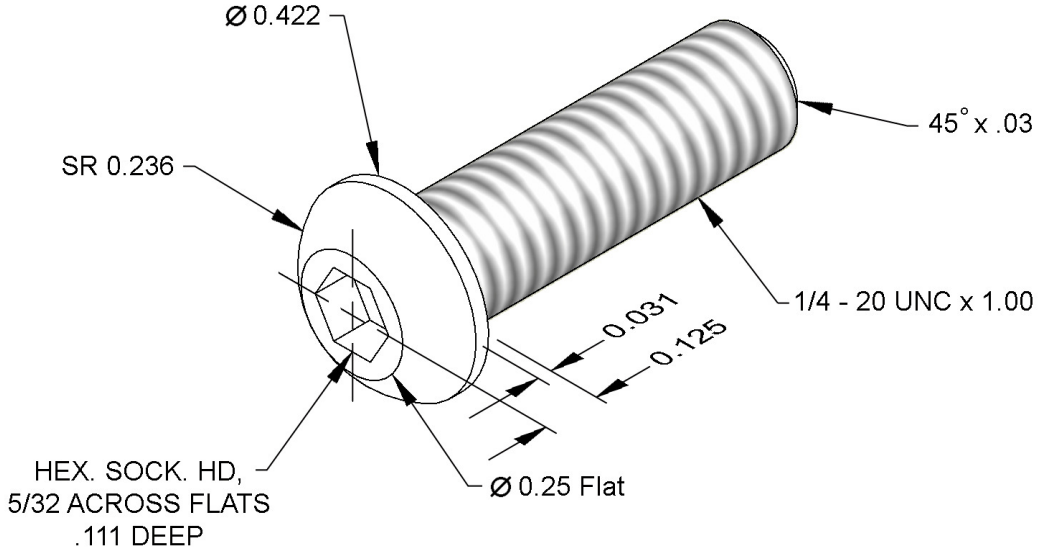

Part #7: Linkage Arm

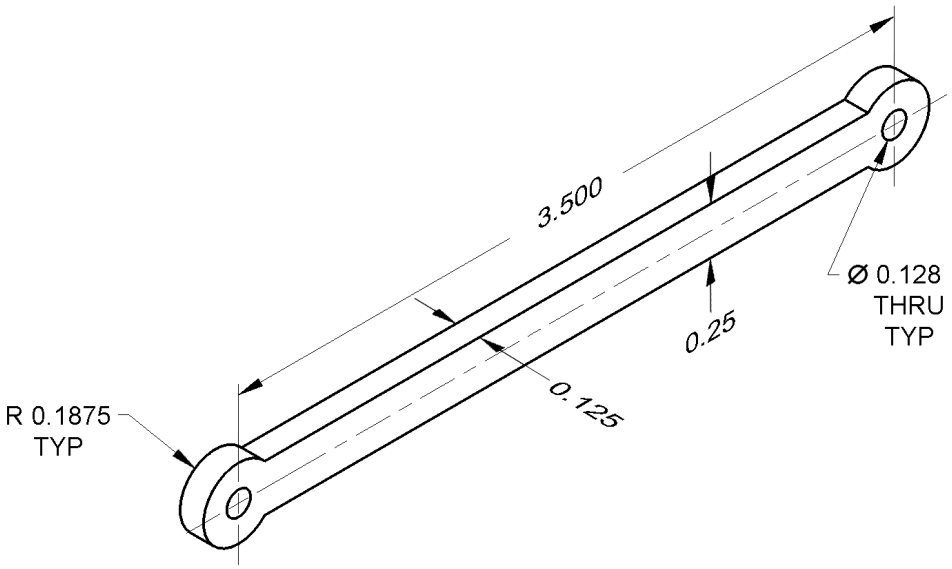

Part #8: Linkage Peg

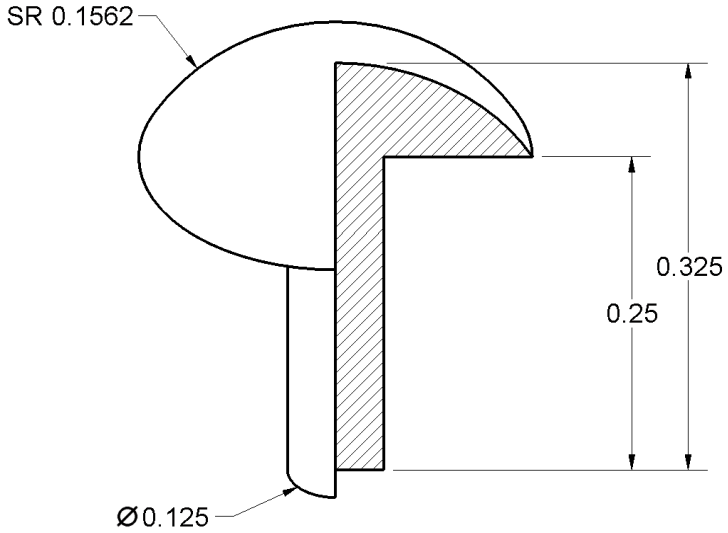

Part #9: Cow Catcher

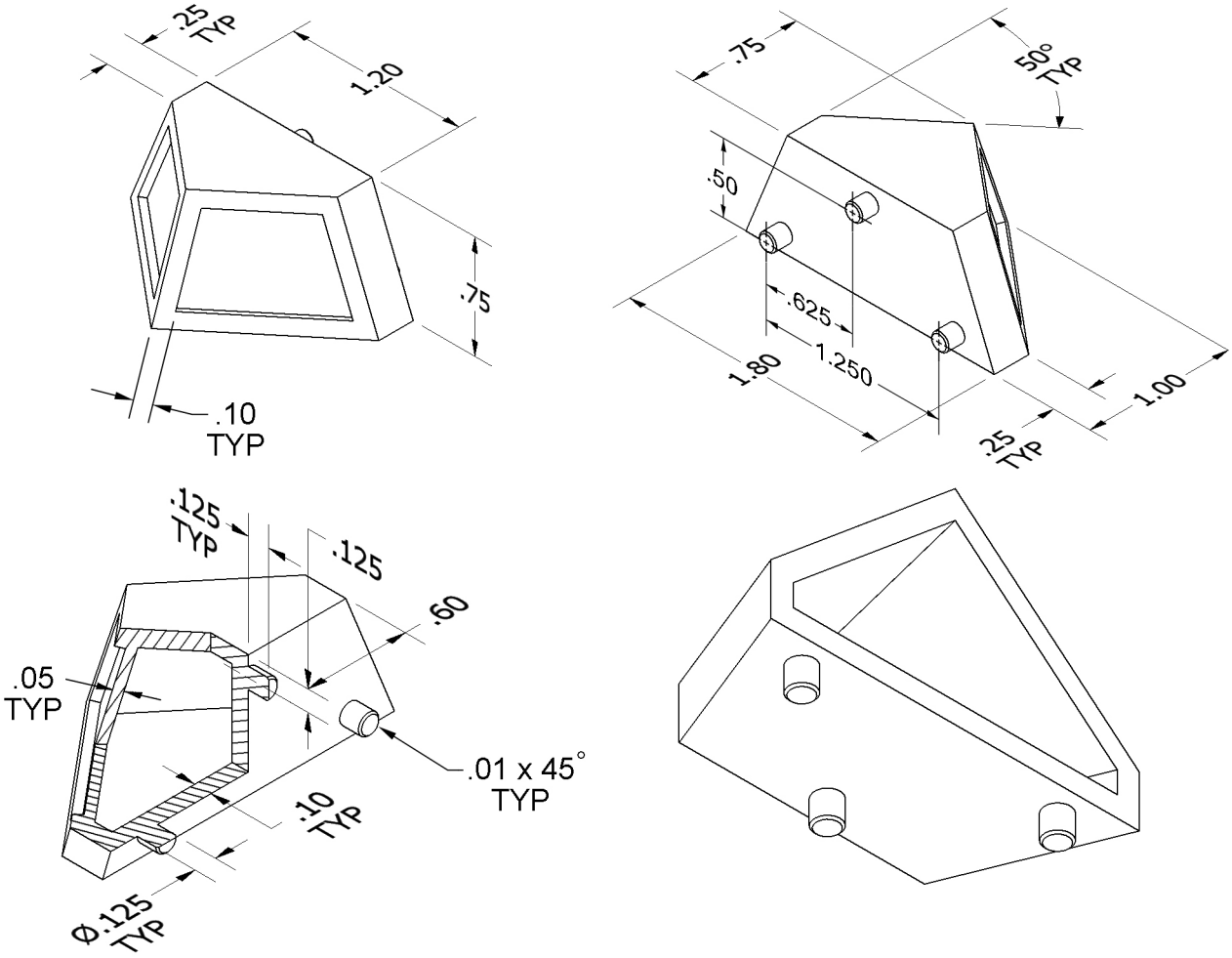

Assembled Train

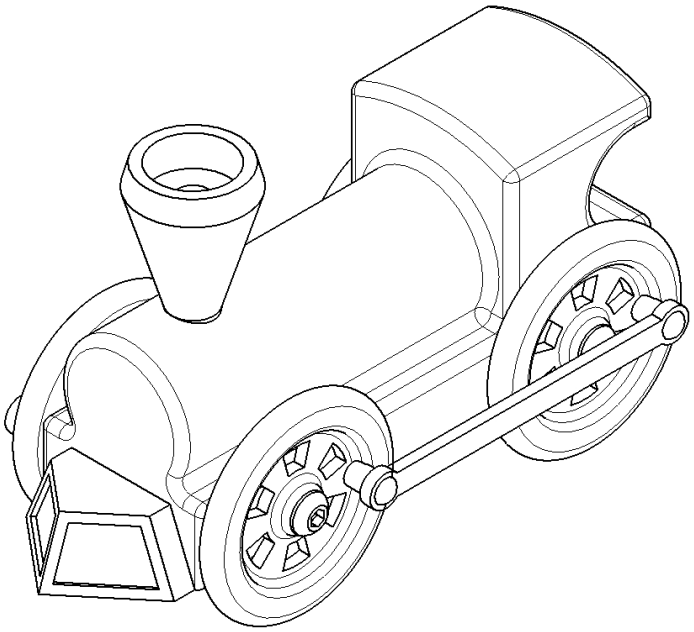

Straight Track

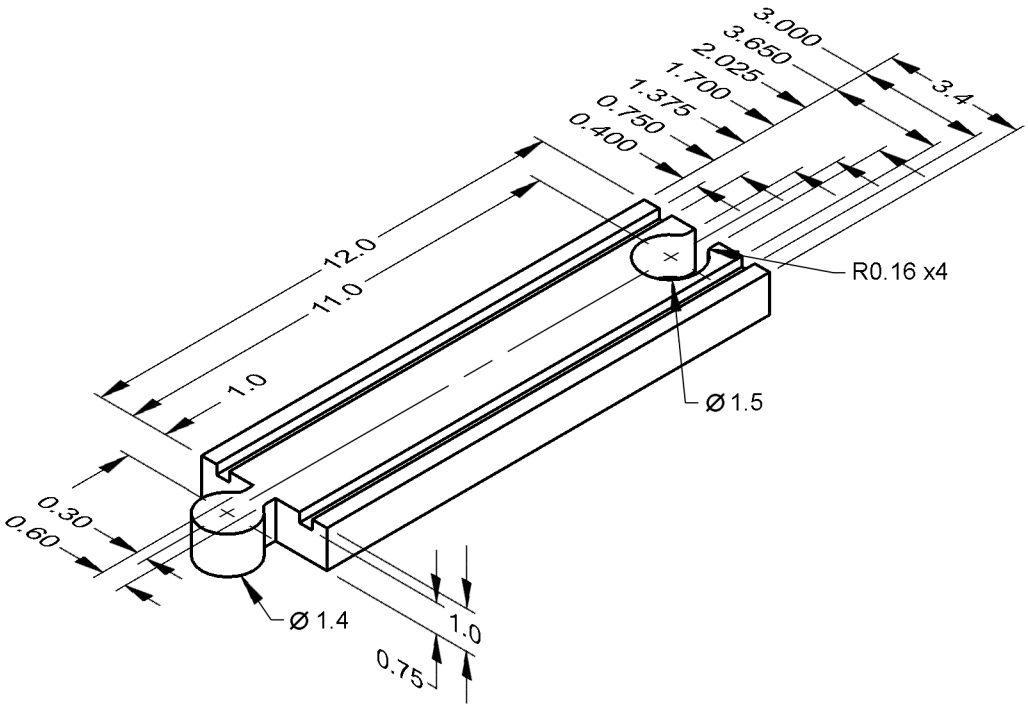

Conclusion

1. Why are drawings composed of different line conventions?

2. What is the purpose of a sectional view?

3. What is the purpose of an auxiliary view?

4. Why are symbols used instead of words to identify hole types?

5. What advantage is there to using algebraic equations instead of numerical values when defining the dimensions of a CAD model?

6. What three types of constraints can be applied to CAD sketches or models?

7. What advantages do CAD drawings have over paper sketches?

Copyright 2007